LHD®

LOAD HANDLING DEVICES

ZEUS 165

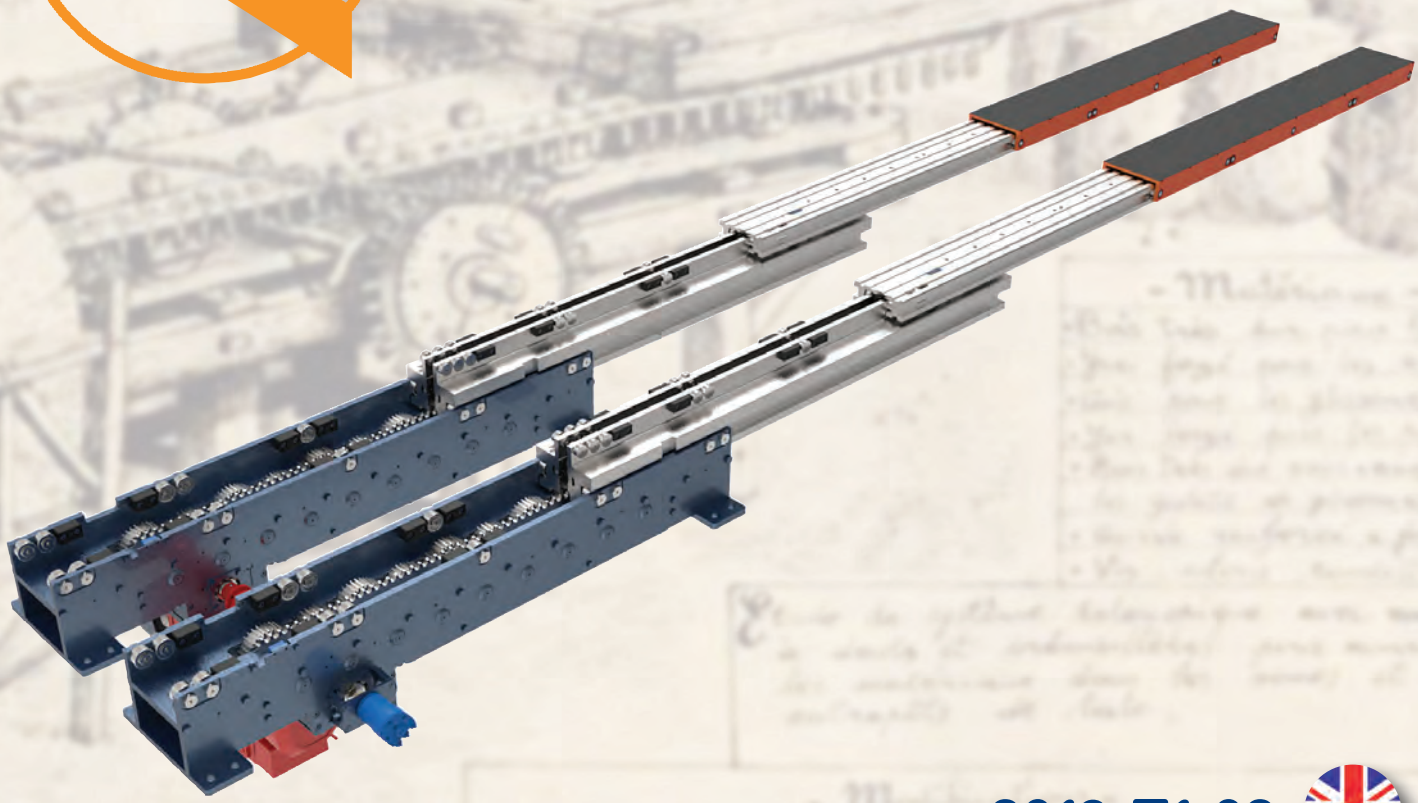

2019-Z1-02

ZEUS 165

Typical and classical double depth telescopic fork for europallets.
It's a single-engined fork; hence, the required space when operating is constant. Although this kind of fork has been outdone by the double-engined version, still it finds application within small size plants or in revampings of old plants.

PRODUCT CODE	Q LOAD (KG)	L FIXED BODY LENGTH (MM)	Ls UPPER SLIDE LENGTH (MM)	S2 DOUBLE DEPTH STROKE (MM)	MAX BENDING UNDER LOAD (MM)
Z165-120	1200	1200	1200	2500	51
Z165-125		1250		2600	56
Z165-130	1000	1300	1240	2750	58
Z165-135		1350		2800	59
Z165-140		1400		2850	
Z165-145	900	1450		2950	58
Z165-150		1500		3000	

As for the transmission, both the system with racks and pinions and with chains are available.

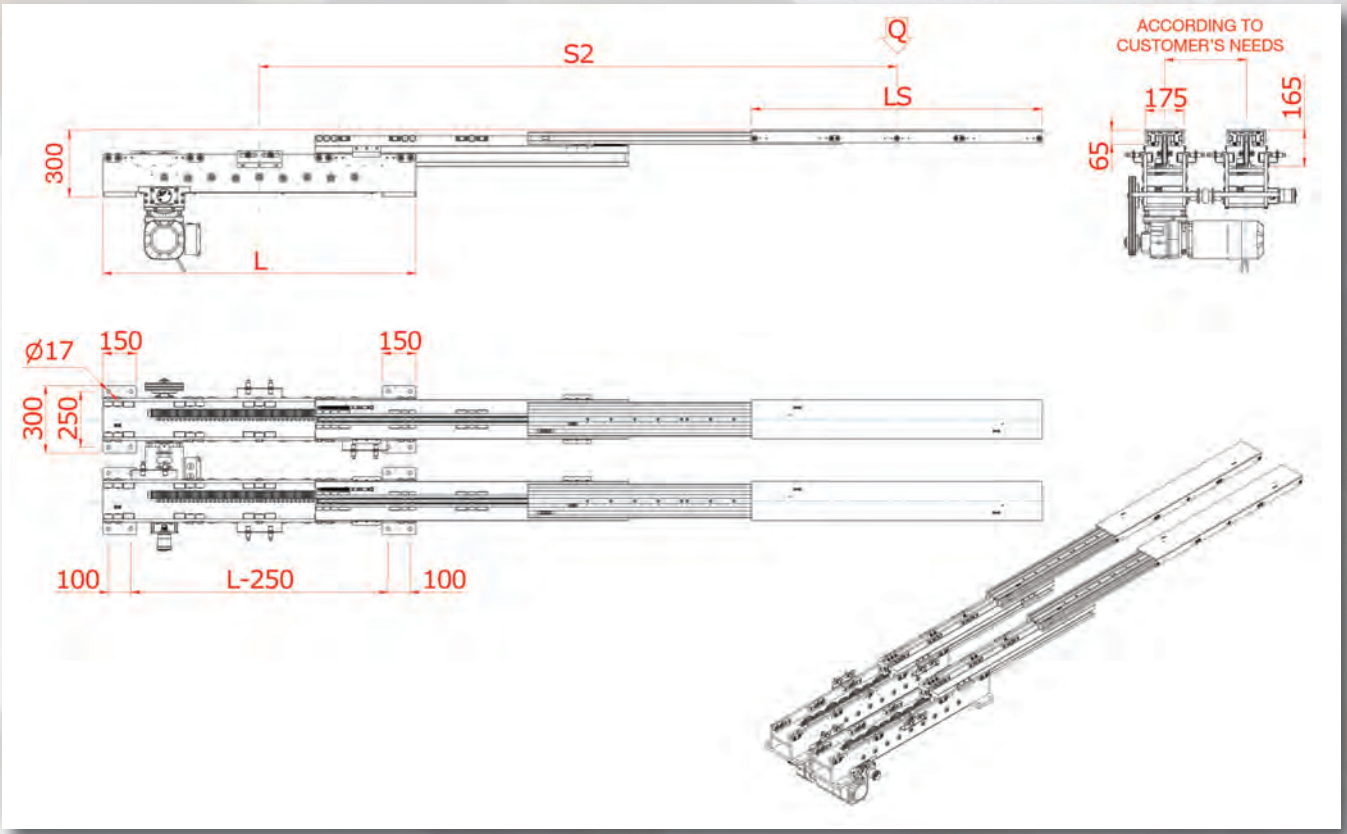

LHD
LOAD HANDLING DEVICES

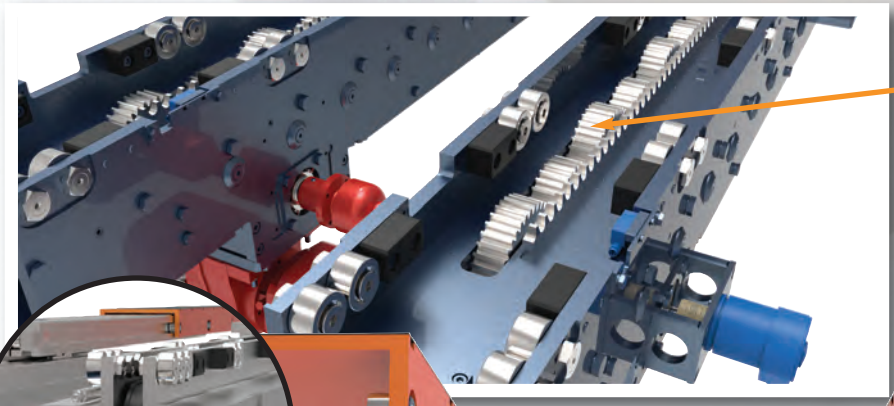

gear trains made of heat-treated and nitrided 42CrMo4

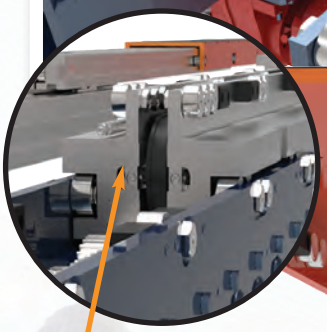

slides are milled from a whole workpiece to ensure limited bending

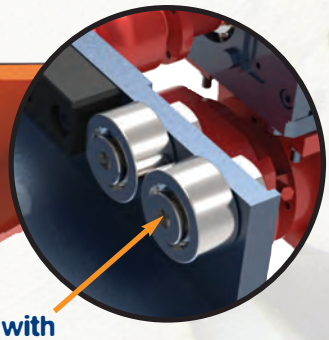

rollers with lubricater

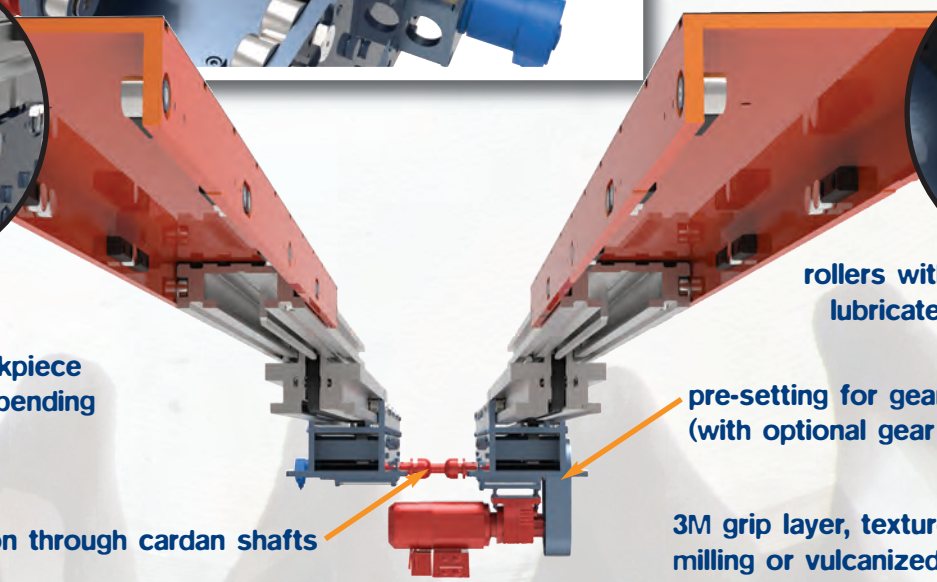

pre-setting for gear motor (with optional gear motor)

power transmission through cardan shafts

3M grip layer, textured rubber, milling or vulcanized adiprene on upper slides

165 mm slide thickness in double depth (with 1.200 Kg payload)

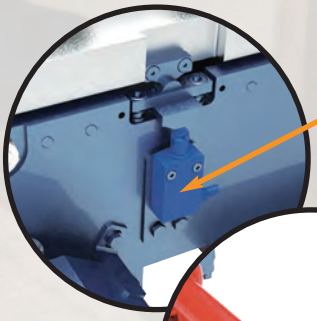

extra-stroke control through mechanical micro-switches

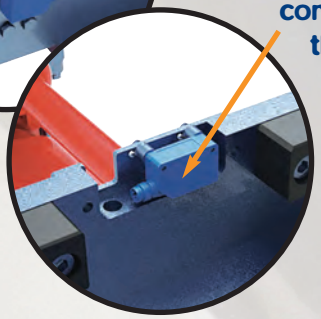

control of centre position through photocells or inductive sensors

longitudinal plays adjustment

lateral plays adjustment

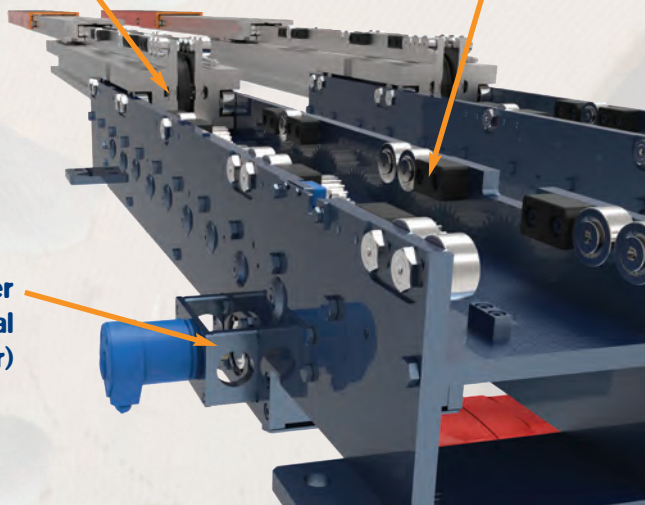

pre-setting for encoder (with optional encoder)

LHD
LOAD HANDLING DEVICES

follow us on

LHD®
LOAD HANDLING DEVICES

HeadQuarter - LHD S.p.A.
Europe production site

Mr. Giuliano Rivoir
Mobile +39 345 187 9559
Phone/Fax +39 011 908 62 70
g.rivoir@lhd.co.com
info@lhd.co.com
Via Piossasco-Rivalta 30-32
10090 Bruino (TO), Italy
Skype LHD SpA

LHD China/太仓艾拉德
Taicang LHD Co., Ltd.
China production site

Mr. Wenbao Zheng/郑文保
No. 68, East Luoyang Road,
Taicang Economic
Development Area,
215400 Taicang,
Jiangsu, China
Mobile/手机 +86 159 3411 99 19
Phone/座机 +86 (0)512 53 547 892
wenbao.zheng@lhd.co.com

Managing Director

Mr. Daniele Ribetto
Mobile +39 346 727 46 78
d.ribetto@lhd.co.com

LHD Deutschland
Österreich & Schweiz

Mr. Silvano Griot
Mobile +39 391 763 55 79
s.griot@lhd.co.com

LHD Western Europe

Mr. Jacopo Trivero
Mobile +39 391 350 64 30
j.trivero@lhd.co.com

LHD Thailand

Mr. Teeradon Anumas
Master Automation Co., Ltd.
Phra Nakhon Si Ayutthaya, Thailand
Mobile +66 8 5516 2777
teeradon.anumas@ma-thailand.com

LHD South Korea

Mr. Ryang Park
G&S Seojin Co., Ltd.
Seoul, South Korea
Mobile +82 10 2951 4960
Phone +82 2 717 7686
rpark@gs-seojin.com

LHD South East Asia

Mr. Roger Chen/陈雁
Mobile/手机 +86 133-0622-8955
Phone/座机 +86 (0)512-53-837-823
roger.chen@lhd.co.com

LHD India

Mr. Mahmood Haider
Noida, New Delhi, India
Mobile +91 98910 98818
m.haider@lhd.co.com

Purchasing

Mr. Davide Gomez
Mobile +39 392 429 61 63
d.gomez@lhd.co.com